Customer Information Sheet

DRAWING No.: M80-826XXXXP	IF IN DOUBT - ASK	©	NOT TO SCALE	THIRD ANGLE PROJECTION	ALL DIMENSIONS IN mm

ORDER CODE:

M80-826XXXXP

TOTAL No. OF WAYS
04, 06, 08, 10, 12
14, 16, 18, 20, 26
34

FINISH
22 - SELECTIVE GOLD + TIN/LEAD
42 - SELECTIVE GOLD + 100% TIN
45 - GOLD

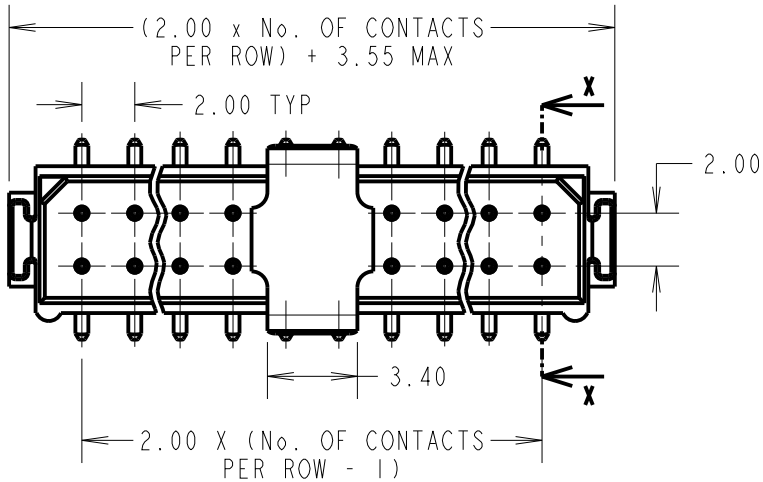

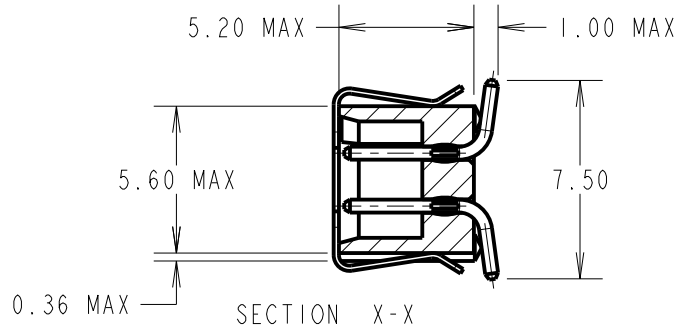

SPECIFICATIONS:
MATERIAL:
MOULDING = G-F PPS UL94V-0, BLACK
CONTACTS = PHOSPHOR BRONZE
PICK & PLACE CAP = PHOSPHOR BRONZE
FINISH:
CONTACTS:
ALL FINISHES = NICKEL UNDERCOAT
22 = 0.75µm GOLD ON CONTACT AREA, 3.0µm 90/10 TIN/LEAD ON TAILS
42 = 0.75µm GOLD ON CONTACT AREA, 3.0µm 100% TIN ON TAILS
45 = 0.75µm GOLD ALL OVER
PACKING:
TUBE
FOR COMPLETE SPECIFICATION, SEE COMPONENT SPECIFICIATION C005XX (LATEST ISSUE)

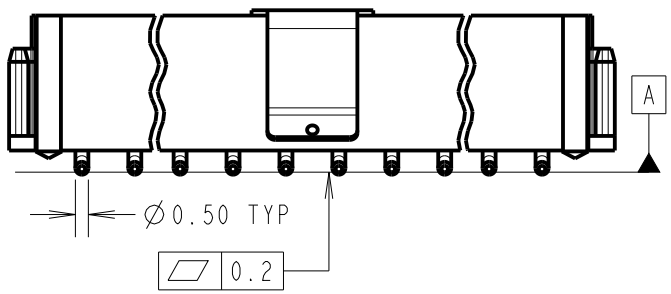

NOTES:
1. 2-OFF STRAIN RELIEF STRAPS M80-0030006 MAY BE USED WITH THIS CONNECTOR.

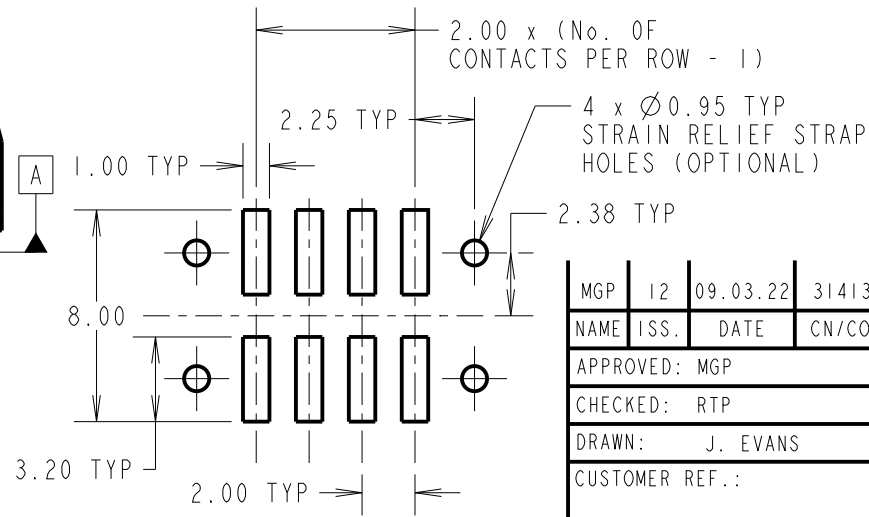

RECOMMENDED PCB LAYOUT
TOLERANCE = ±0.05mm

MGP	12	09.03.22	31413
NAME	ISS.	DATE	CN/CO

APPROVED: MGP
CHECKED: RTP
DRAWN: J. EVANS
CUSTOMER REF.:
ASSEMBLY DRG:

HARWIN
www.harwin.com
technical@harwin.com

THIS DRAWING AND ANY INFORMATION OR DESCRIPTIVE MATTER SET OUT HEREON ARE CONFIDENTIAL AND COPYRIGHT PROPERTY OF THE HARWIN GROUP AND MUST NOT BE DISCLOSED, LOANED, COPIED OR USED FOR MANUFACTURING, TENDERING OR FOR ANY OTHER PURPOSE WITHOUT THEIR WRITTEN PERMISSION.

TOLERANCES
X. = ±1mm
X.X = ±0.50mm
X.XX = ±0.20mm
X.XXX = ±0.01mm
ANGLES = ±5°
UNLESS STATED

MATERIAL: SEE ABOVE
FINISH: SEE ABOVE
S/AREA: mm²

TITLE: DATAMATE L-TEK MALE DIL VERTICAL SMT ASSEMBLY - UNLATCHED, P/PLACE

DRAWING NUMBER: **M80-826XXXXP**

SHT 2 OF 2