Customer Information Sheet

DRAWING No.: M80-5L10605M5-01-313-01-333	IF IN DOUBT - ASK	©	NOT TO SCALE	THIRD ANGLE PROJECTION	ALL DIMENSIONS IN mm

SPECIFICATIONS:

MATERIAL:
- MOULDING: GLASS FILLED PPS, UL94V-0, BLACK
- SIGNAL CONTACT: PHOSPHOR BRONZE
- COAX CONTACT:
  - BODY = BRASS
  - INNER CONTACT = PHOSPHOR BRONZE
  - INSULATOR = PTFE
- POWER CONTACT: COPPER ALLOY
- BOARD-MOUNT JACKSCREW, SCREW: STAINLESS STEEL

FINISH:
- SIGNAL CONTACT:
  - 0.75µm ALL OVER GOLD
- COAX CONTACT: BODY, INNER CONTACT = GOLD
- POWER CONTACT: GOLD

ELECTRICAL:
- WORKING VOLTAGE = 800V AC/DC
- VOLTAGE PROOF = 1200V AC/DC
- INSULATION RESISTANCE = 100MΩ MIN
- SIGNAL CONTACT:
  - CURRENT RATING AT 25°C = 3.0A MAX
  - CURRENT RATING AT 85°C = 2.2A MAX
  - CONTACT RESISTANCE = 25mΩ MAX
- COAX CONTACT:
  - FREQUENCY RANGE = 6GHz
  - IMPEDANCE = 50Ω
  - V.S.W.R = 1.05 + (0.04 x FREQUENCY) GHz MAX
  - CONTACT RESISTANCE 6mΩ MAX
  - INSULATION RESISTANCE = 10^6MΩ @250V AC
  - OPERATING VOLTAGE = 180V AC @ 500mA
  - MAXIMUM VOLTAGE = 1000V AC
- POWER CONTACT:
  - CONTACT RESISTANCE = 6mΩ MAX
  - CURRENT RATING = 20A MAX

MECHANICAL:
- DURABILITY = 500 OPERATIONS
- SIGNAL CONTACT:
  - INSERTION FORCE = 2.0N MAX
  - WITHDRAWAL FORCE = 0.2N MIN
- COAX CONTACT:
  - INSERTION FORCE = 8N MAX
  - WITHDRAWAL FORCE = 0.5N MIN
- POWER CONTACT:
  - INSERTION FORCE = 8N MAX
  - WITHDRAWAL FORCE = 0.5N MIN

ENVIRONMENTAL:
- TEMPERATURE RANGE = -55°C TO +125°C

PACKING:
- TUBE

FOR COMPLETE SPECIFICATION SEE COMPONENT SPECIFICATION C005XX (LATEST ISSUE)

NOTES:
1. CONNECTORS ARE SUPPLIED WITH SCREWS LOOSE.

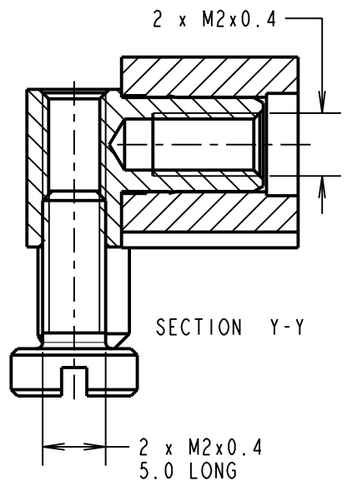

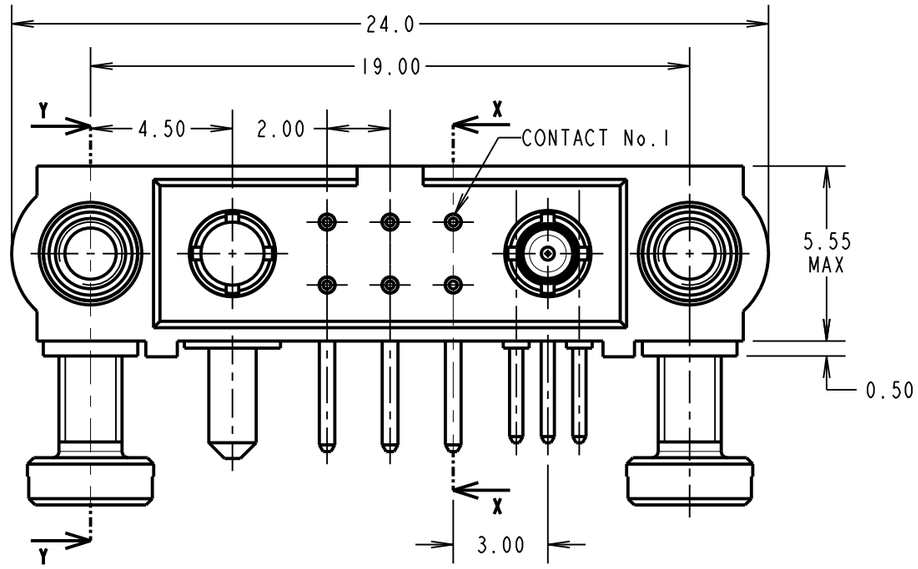

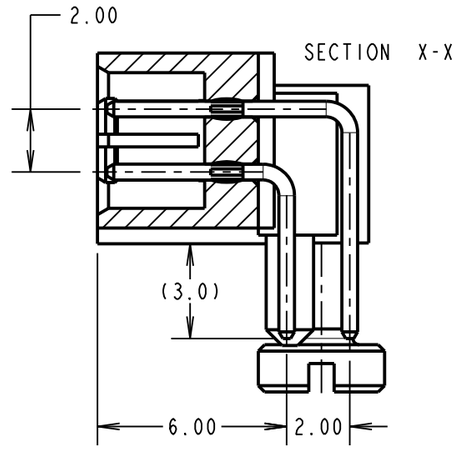

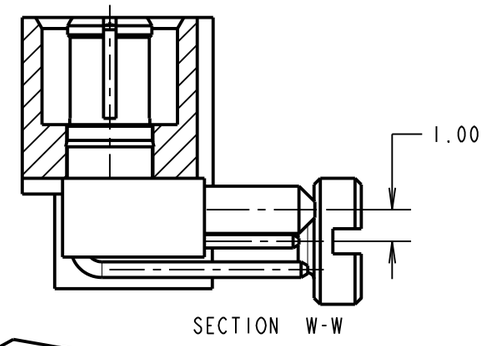

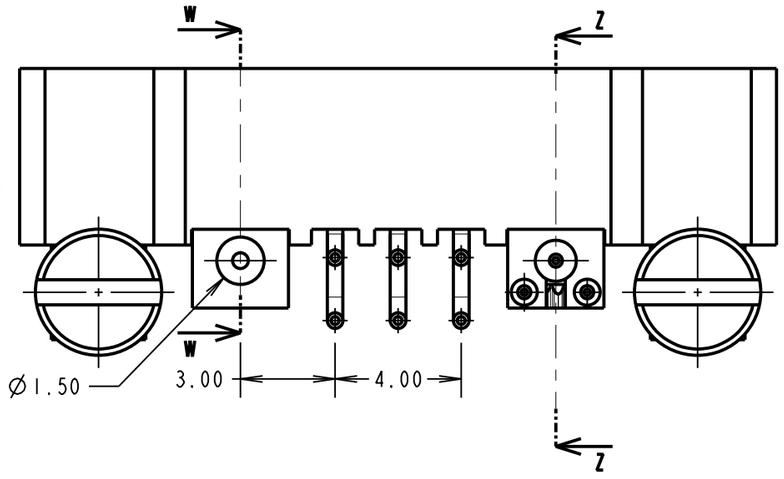

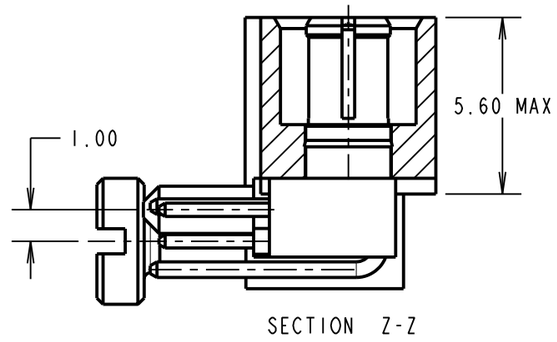

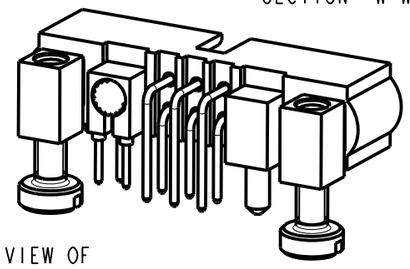

VIEW OF POWER CONTACT

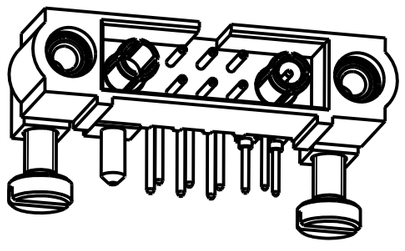

COMPLETE ASSEMBLY SHOWN FOR ILLUSTRATION ONLY

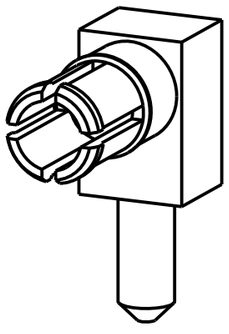

RECOMMENDED PCB LAYOUT - TOLERANCE ±0.05mm

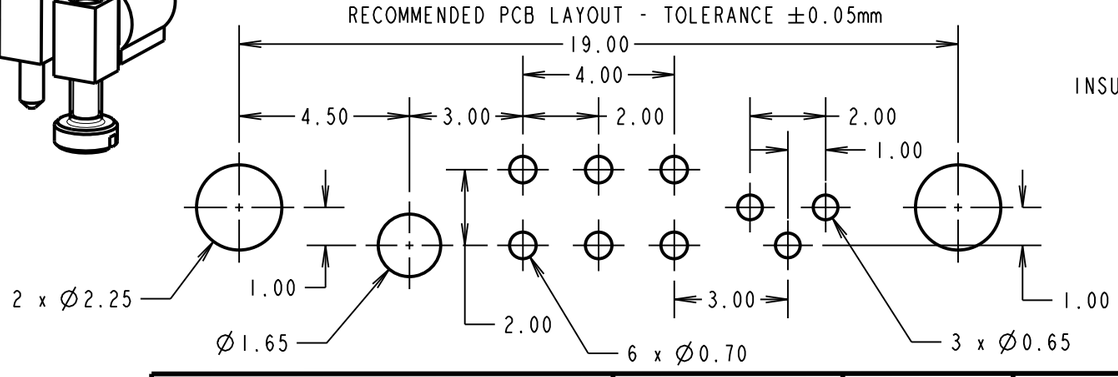

VIEW OF COAX CONTACT

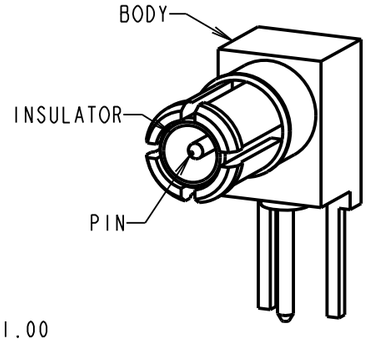

MGP	3	15.09.20	21615
NAME	ISS.	DATE	CN/CO

APPROVED: MGP
CHECKED: RA
DRAWN: R.ADDE
CUSTOMER REF.:
ASSEMBLY DRG:

HARWIN
www.harwin.com
technical@harwin.com

THIS DRAWING AND ANY INFORMATION OR DESCRIPTIVE MATTER SET OUT HEREON ARE CONFIDENTIAL AND COPYRIGHT PROPERTY OF THE HARWIN GROUP AND MUST NOT BE DISCLOSED, LOANED, COPIED OR USED FOR MANUFACTURING, TENDERING OR FOR ANY OTHER PURPOSE WITHOUT THEIR WRITTEN PERMISSION.

TOLERANCES UNLESS STATED:
X. = ±1mm
X.X = ±0.50mm
X.XX = ±0.20mm
X.XXX = ±0.01mm
ANGLES = ±5°

MATERIAL: SEE ABOVE
FINISH: SEE ABOVE
S/AREA: mm²

TITLE: JACKSCREW DATAMATE MIXED TECHNOLOGY PC TAIL MALE ASSEMBLY

DRAWING NUMBER: M80-5L10605M5-01-313-01-333

SHT 2 OF 2