Gecko-MT Connectors

Male Cable Assemblies

- Ready-made cable assemblies, backpotted for added strain relief.
- 4-finger Beryllium Copper contacts.
- No. 1 position identified on housing.
- Constructed with Contact 1 to Contact 1, Contact A to Contact A, etc.
- Male-to-male cable length (not shown) is measured in the same style as male-to-female.

MALE SINGLE ENDED

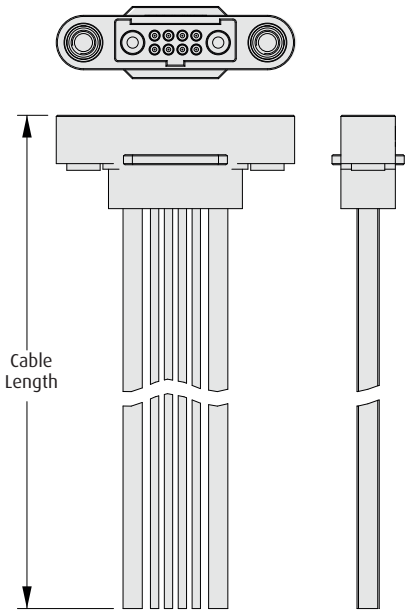

MALE-FEMALE

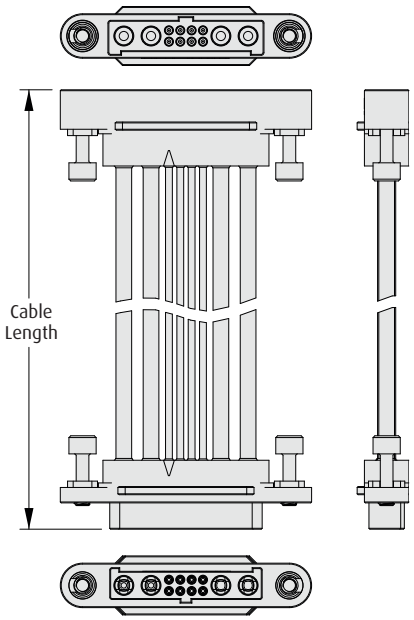

HOW TO ORDER

G125 - M CX 08 MX - XDXD - XXXX - XX

SERIES CODE

G125	

GENDER - FIRST END

M	Male

CABLE SIZE (SIGNAL)

C1	26 AWG
C2	28 AWG

SCREW-LOK

M1	Internal Thread
M3	Floating Hex Socket (Reverse Fix)

TERMINATION - SECOND END

L	Loose cut end
F1	Female with Floating Hex Socket
F2	Female with Internal Thread (Reverse Fix)
M1 or M3	Male connector (same as First End)

CABLE LENGTH

XXXX	XXXXmm

POWER CONTACTS

1D1D	1+8+1 configuration
2D2D	2+8+2 configuration

All dimensions in mm.

Patent Published